Get the best

GLANZ ENGINEERING & TRADERS

info@glanzengineering.in | www.glanzengineering.in

We Deal with

BONVARIO EURODRIVES

3 Phases & Single Phase Motors
Bevel Helical Geared Motor
Worm Geared Motors
Geared Motors
3

HAVELLS

Standard IE2/IE3/IE4 Motor
Brake Motors
Smoke Motors
Inverter Motors
Crane Motors
6

DELTA

AC Drive
PLC
HMI
AC Servo Sytem
7

Panasonic

AC Servo System
Sensor
8

Baumer

Encoder
Sensor

INOVANCE

SERVO MOTOR
SERVO DRIVE
AC DRIVE
PLC
HMI
9

GISHNU Transforming Innovation

G' Series
GAL' Series
H' Series
10

BONVARIO

BONVARIO is one of the leading suppliers of industrial automation products which are widely accepted by thousands of satisfied customers.

For our customers BONVARIO is a symbol of trust, dependability and performance for the last 3 decades.

BONVARIO supplies Robust Worm, Helical, Bevel and Parallel shaft Gearboxes with state of-the-art features along with their heart, Electric Motors to provide a complete automation solution to our customers as per Italian standards which guarantee everlasting performance.

Gearbox (Aluminum & Cast Iron)

Worm gearbox (Aluminum)

Model- BLM – 30-40-50-63-75-90-110-130-150

Ratio- 7.5, 10, 15, 20, 25, 30, 35, 40, 45, 50, 60, 70, 80,1 00

Universal mounting

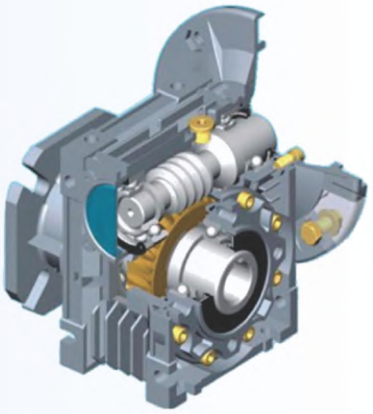

Model – BVF – 30,44,49

Ration – 7, 10, 14, 20, 28, 35, 46, 60, 70, 100

Universal mounting

Model- BW- 63,75,86,

Ratio- 7, 10, 12, 15, 19, 24, 30, 38, 45, 64, 80, 10

Universal mounting

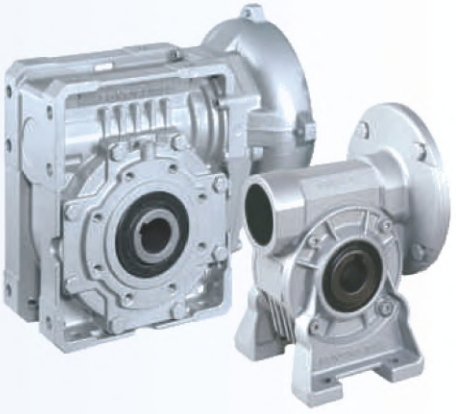

Heli-worm kit

BC- 63,71,80,90

Ratio – 2.42, 3, 3.17

Helical Gear Box (Aluminum Body)

Model - BON -20,25,30,35

Ratio - 3.82, 4.63, 5.69, 7.72, 9.17, 9.81, 11.9, 13.8, 14.62, 17.86, 19.83, 23.56, 28.5, 35.47, 40.1, 45.89, 53.33

Mounting - Foot / Flange.

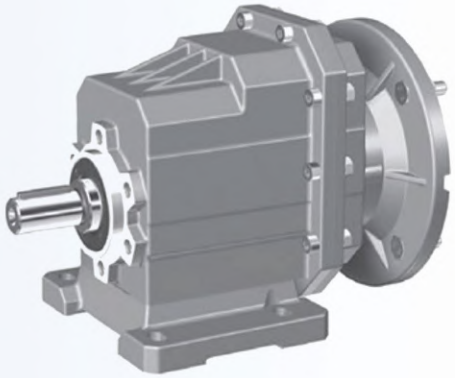

Inline Helical Gearbox (Cast Iron Body)

Model - BR- 17, 27, 37, 47, 57, 67, 77, 87, 97, 107, 137, 147, 167

Mounting - Foot / Flange

Stages - 2 & 3

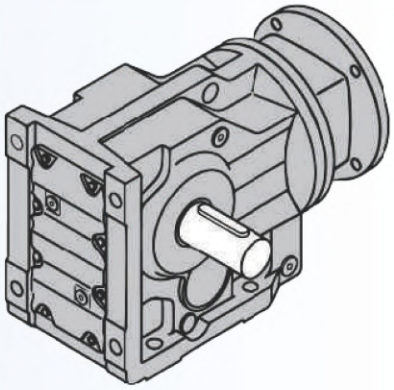

Bevel Helical (Cast Iron)

Model - BK - 37, 47, 57, 67, 77, 87, 97, 107, 127, 157, 167, 187

Mounting - Foot / Flange

Stage - 2 & 3

Parallel Shaft Helical (Cast Iron)

Model - BF - 37, 47, 57, 67, 77, 87, 97, 107, 127, 157,1 67, 187

Mounting - Foot / Flange

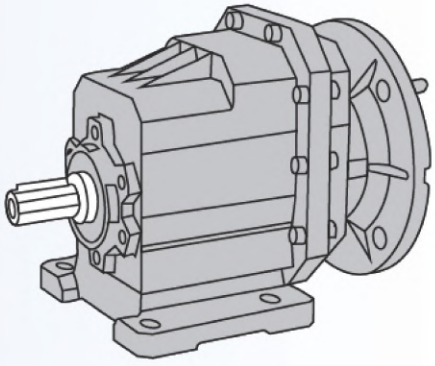

INDUCTION MOTOR

Electric Motors to provide a complete automation solution to our customers as per Italian standards which guarantee everlasting performance. The BM line motors frame size 56 ÷ 132 are totally enclosed, fan cooled, with squirrel cage rotor. the frame is made from light weight die cast aluminum alloy.

These motors are - multiple voltage, multi frequency 50/60 hz, F class insulation, S1 continuous duty service, IP55 protection, IE2/IE3/IE4 efficiency class, tropical zed. There are usually two ways motors are treated to resist moisture. One is dipping the winding in a polyester or epoxy resin, to create a moisture-resistant coating. The other – more effective method – is Vacuum Pressure Impregnation (VPI) of the winding

Aluminum Body Electric Motor

Three Phase Motors (Aluminum Body)

Power – 0.125hp Up to 10 HP

Pole – 2 (2880 RPM), 4 (1440 RPM), 6 (960RPM),

Mounting – Foot / Flange / Foot cum Flange / Foot cum face

Single Phase Motors (Aluminum Body)

Power – 0.25hp Up to 5 HP

Pole – 2(2880 RPM), 4 (1440 RPM)

Mounting – Foot / Flange / Foot cum Flange / Foot cum face

Brake Motor (Aluminum Body)

Pole – 2, 4, 6

Power – 0.25 HP to 10HP

Mounting – Foot / Flange / Foot cum Flange / Foot cum face

HAVELLS

HAVELLS INDIA LIMITED is a leading Fast-Moving Electrical Goods company with a strong domestic presence. We are one of the world's leading Low Voltage Motors manufacturers. Our presence in 53 countries has garnered global recognition with various international approvals

STANDARD IE2/IE3/IE4 MOTOR

B3,B5,B35 & other special mounts
2p/4p/6p/8p
0.25hp-470hp
IE2/IE3/IE4 available

B3/B5/B35/B14
0.25hp-25hp
2p/4p/6p/8p
EMCO brakes

BRAKE MOTOR

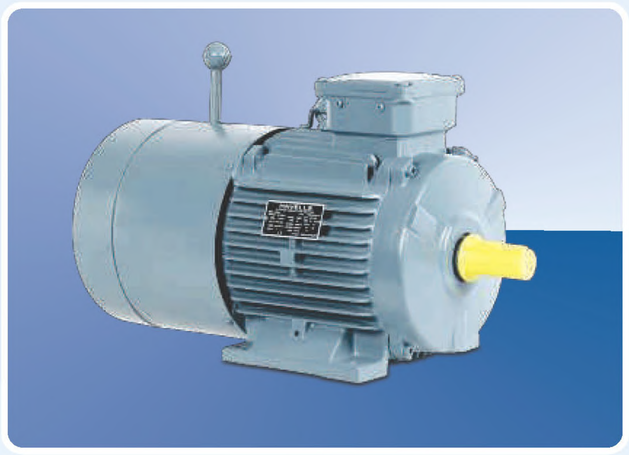

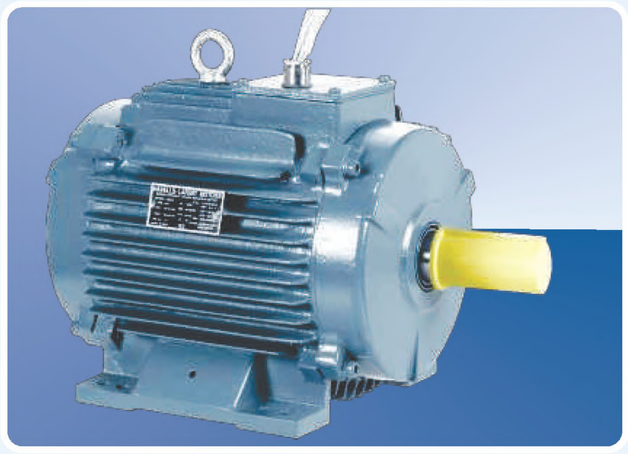

SMOKE MOTOR

0.37kw-350kw
up to 400.C
operation
H class insulation

B3/B5/B35
1hp-75hp
with or without encoder arrangements
2p/4p/6p/8p
external force cooling fan & VPI treated

INVERTER MOTOR

SINGLE PHASE MOTOR

- **0.25 HP - 3 HP**
- **Input voltage 230**
- **Frame: 56**

AC DRIVE

MS 300 • C2000 PLUS • ME300 • EL-W
CP2000 • EL • E • C200 • MH300-L
ED • CFP2000

PLC

DVP-SS2 • DVP-SA2 / SE • DVP-ES2 / Ex2
DVP-EH3 • DVP-SX2 • DVP-SV2
DVP10PM00M • DVP20PM00D / M
DVP15MC / DVP50MC • AH500
AH560 • AS300 PLC • As200

HMI

TP02 / 04 • TP08 • TP04P
DOP-W • DOP-100

AC SERVO SYSTEM

ASDA A2
ASDA B2/B2L
ASDA A2E (Ether CAT)

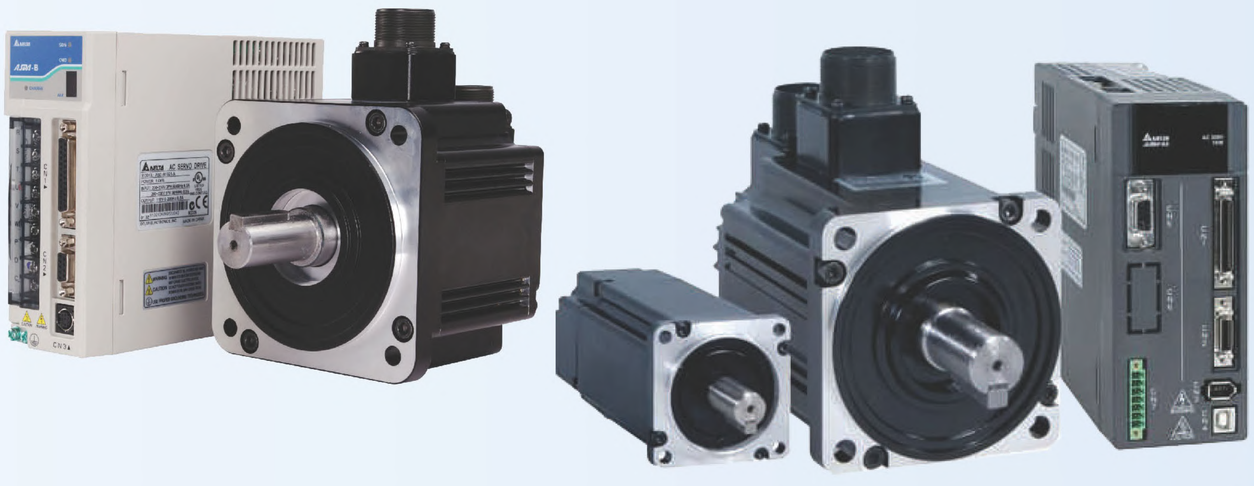

Panasonic

AC SERVO SYSTEM

MINAS A6 • MINAS A6 • MINAS LIQI
MINAS A6N • MINAS A6V FOR AGV
MINAS A6SL FOR LINER MOTOR

SENSOR

AREA • CROSS-BEAM AREA
LIGHT CURTAIN • PHOTOELECTRIC
MICRO • FIBER • FIBER HEAD
INDUCTIVE PROXIMITY • LASER • MARK
ULTRA-COMPACT & SLIM • DIGITAL PRESSURE
DIGITAL FLOW • MICRO LASER MEASUREMENT
OPTICAL FORK • ULTROSONIC FORK

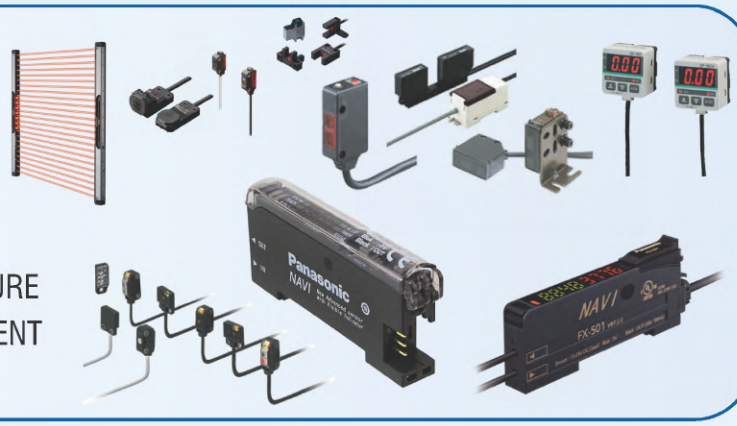

ENCODER

INCREMENTAL ENCODER • ABSOLUTE ENCODER
BEARING LESS ENCODER • CABLE-PULL ENCODER
HEAVY DUTY ENCODER • TECHO GENERATOR
LINEAR ENCODER

SENSOR

ULTRASONIC SENSOR
PHOTOELECTRIC SENSOR
INDUCTIVE AND CAPACITIVE
PROXIMITY SENSOR

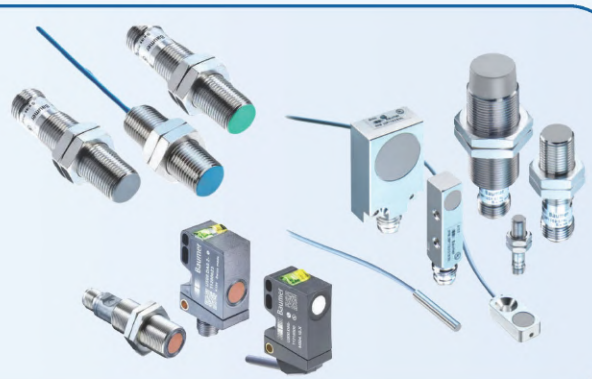

Baumer

SERVO MOTOR

- MS 1 Servo Motors
- Rated Power: 502 - 7.5 kw

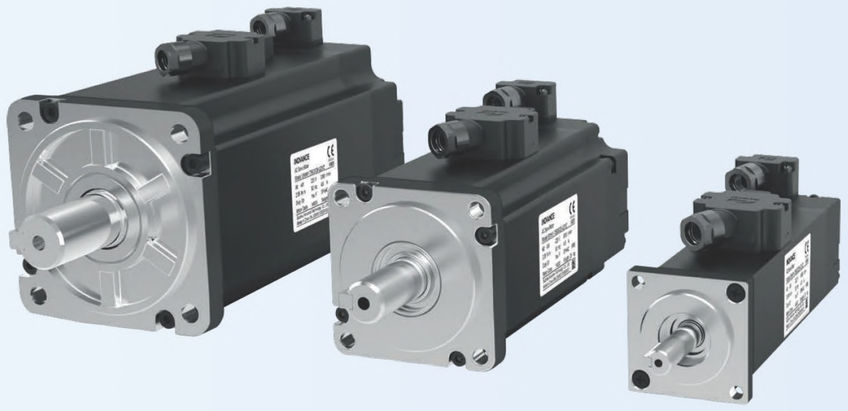

SERVO DRIVE

- SV660 - Single-Axis Servo Drive
- SV670 - Single-Axis Servo Drive

AC DRIVE

- MD800 - Compact AC Multi Drive
- MD810 - AC Multi Drive
- MD520 - High Performance AC Drive
- MD290 - General Purpose AC Drive
- MD310 - Compact Vector, Economic AC Drive
- MD200 - General Purpose, Economic Drive

PLC

- H3U PLC - High Performance with Motion Control
- AM400/600 Motion Controller
- Easy Series PLC
- GL10 AND GR10 EXPANSION MODULES
- GL20 EXPANSION MODULES

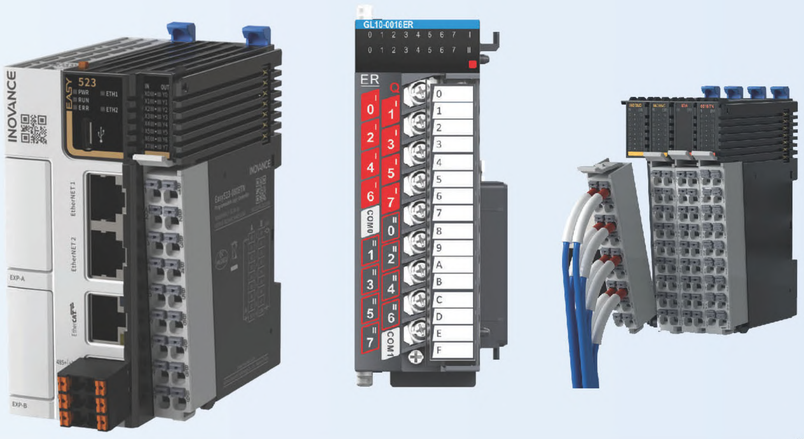

HMI

- IT7000 SERIES HMI

G' Series

G Series - Adaptable Worm | Type - U, V
Ratio - 5, 10, 15, 20, 25, 30, 40, 50, 60, 70

GAL' Series

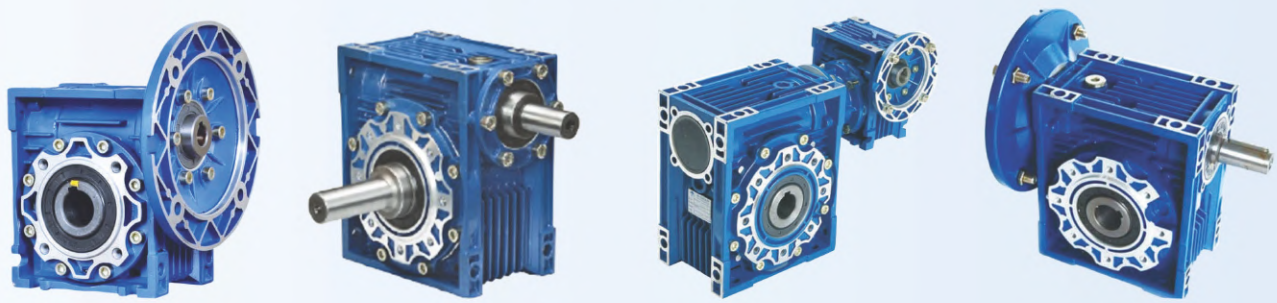

GMV Series - Worm Gear Box | Box - 40, 50, 63, 75, 90, 110, 130, 150
Ratio- 7.5, 10, 15, 20, 25, 30, 40, 50, 60,70, 80, 90,100

H' Series

GH Series - Inline Helical Gear Box | Stage - 2 Stage, 3 Stage
Box - 50, 65, 80, 95, 110, 125 | Output Shaft Size - 30, 35, 40, 50, 60, 80

KDS, KDI & KDT MONOBLOC PUMP

KSMB STAINLESS STEEL MONOBLOC PUMP

SS GEAR PUMP

HAVELLS IP PRODUCTS

LUBI SMPS

Standard DIN rail Series
Panel Mount Series
Eco DIN rail Series

SERVO PLANETARY GEAR BOX

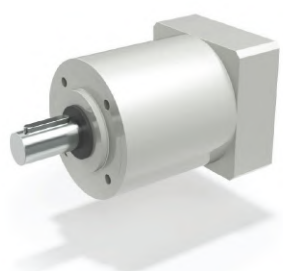

ZD AC GEAR MOTOR

Induction Motor	-	1ph & 3 ph
Speed Adjustable Motor	-	1ph
Available Watts	-	6w, 15w, 25w, 40w, 60w, 90w, 120w, 140w, 180w, 200w
Gear Head	-	Output Shaft - 12 mm, 15 mm
Ratio	-	3, 5, 7.5, 10, 15, 20, 25, 30, 50, 60, 75, 100,150

Be a Earth Lover

Earth Day - Every Day

Think Green, Keep It Clean

Get the best

GLANZ ENGINEERING & TRADERS
28, Thirunagar, 2nd St, 100 Feet Road,
Vadapalani, Chennai, Tamil Nadu-600 026
Mob: **9962848377, 9962848330, 9962848383, 9840348307**
Phone : **044-49594530**
E-mail: info@glanzengineering.in, glanzengg@gmail.com
Website : www.glanzengineering.in

IM GRAPHICS
965 946 68 66